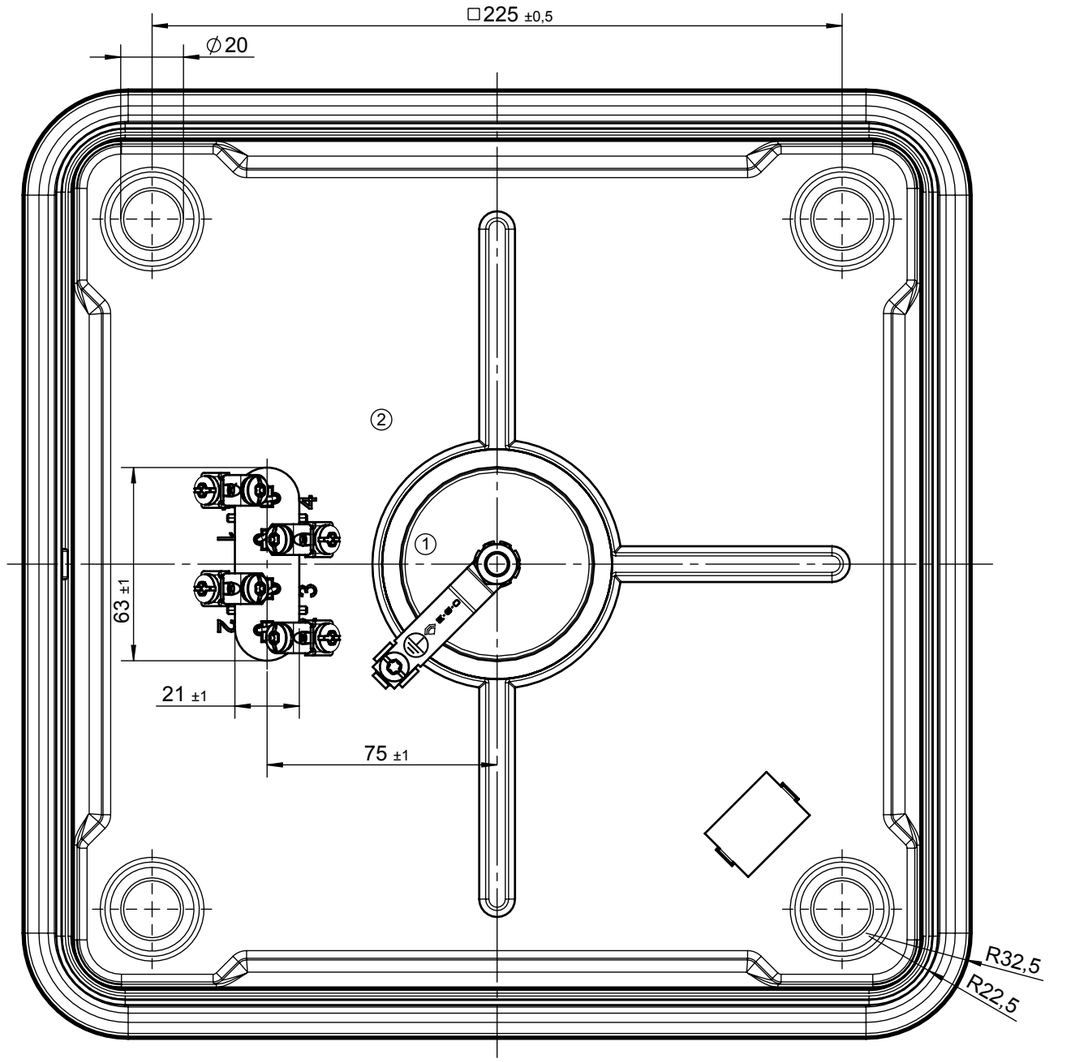

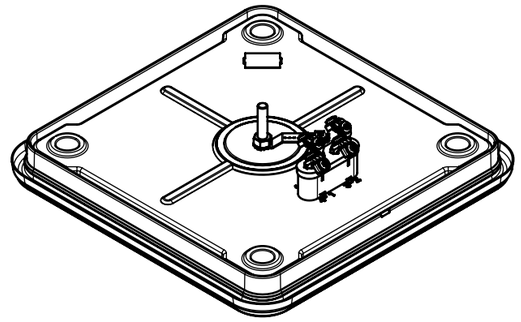

E·G·O
11.33473.237
2500W 115V
12 165

voltage marking
230 V without
240 V blue
400 V red
other green

connection
4 straps with clamp bracket and screws M5

earthing
with connecting lug clamp bracket and screw M5

mounting
The hotplate is to support on the 4 supporting disks

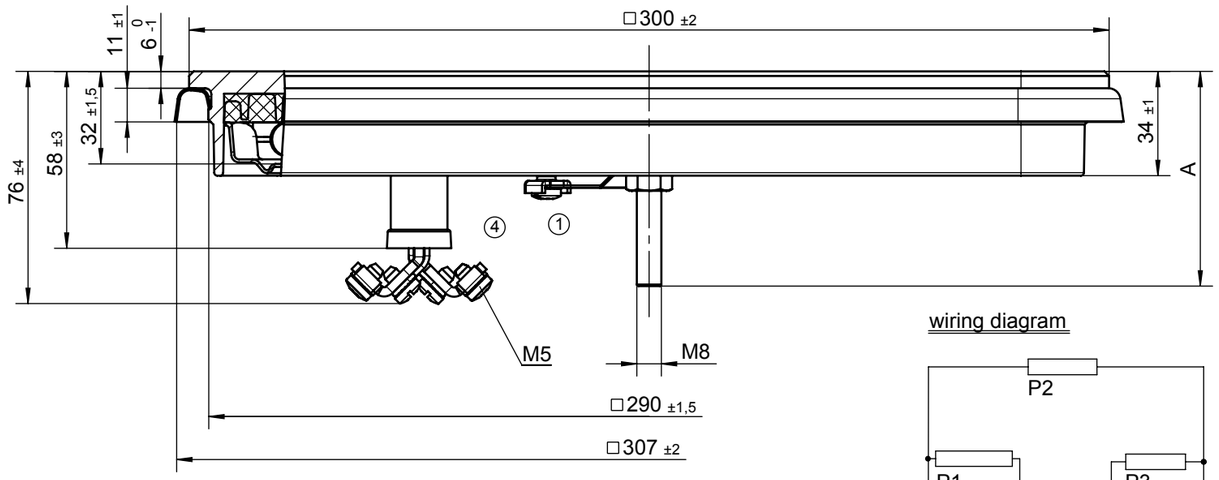

wiring diagram

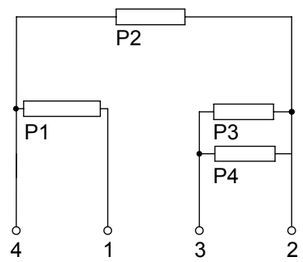

③ Pos	Type	W Wattage	V Voltage	P1	P2	P3	P4	6	5	4	3	2	1	Appro.		"A" in mm
				Rated conductor				Switch positions								
6	11.33473.338	3000	400	750	750	750	750	3000	2250	1500	750	500	300	X		70±3
5	11.33473.335	3000	440	750	750	750	750	3000	2250	1500	750	500	300	X		70±3
4	11.33473.331	2500	400	625	625	625	625	2500	1875	1250	625	420	250	X		70±3
3	11.33473.239	3000	230	750	750	750	750	3000	2250	1500	750	500	300	X		70±3
2	11.33473.238	2500	230	625	625	625	625	2500	1875	1250	625	420	250	X		70±3
1	11.33473.237	2500	115	625	625	625	625	2500	1875	1250	625	420	250			70±3

Cha.	Information No.	Date
3	A01597	2017-11-22
2	A01495	2012-12-11
1	A01449	2012-08-03
F.Rel.	A01402	2012-07-16

This document is exclusively committed to you for the agreed purpose. Any kind of duplication, utilization or communication of its content is prohibited, if not expressly conceded otherwise. Violators are committed to pay compensations. Any claims of existing or future property rights remain unaffected.

	Date	Name
Creat.	2019-01-15	MAKUCJ
Proc.	2019-02-04	MAKUCJ
Rel.		

Blank No. EN Mat.No.
Material
Surface Texture ISO 1302
General Tolerances
Scale Unit mm
Scale 1:2

Designation
EGO Com. Hotplate 300x300

E·G·O

document id. 11.33473.XXX-101-04-A
Stat. G
Sheets
Doc.
Ex.Doc.

Origin | Repl.for 11.33473. Div. | Repl.by | Ref.

A3/V04 - Printout not true to Scale