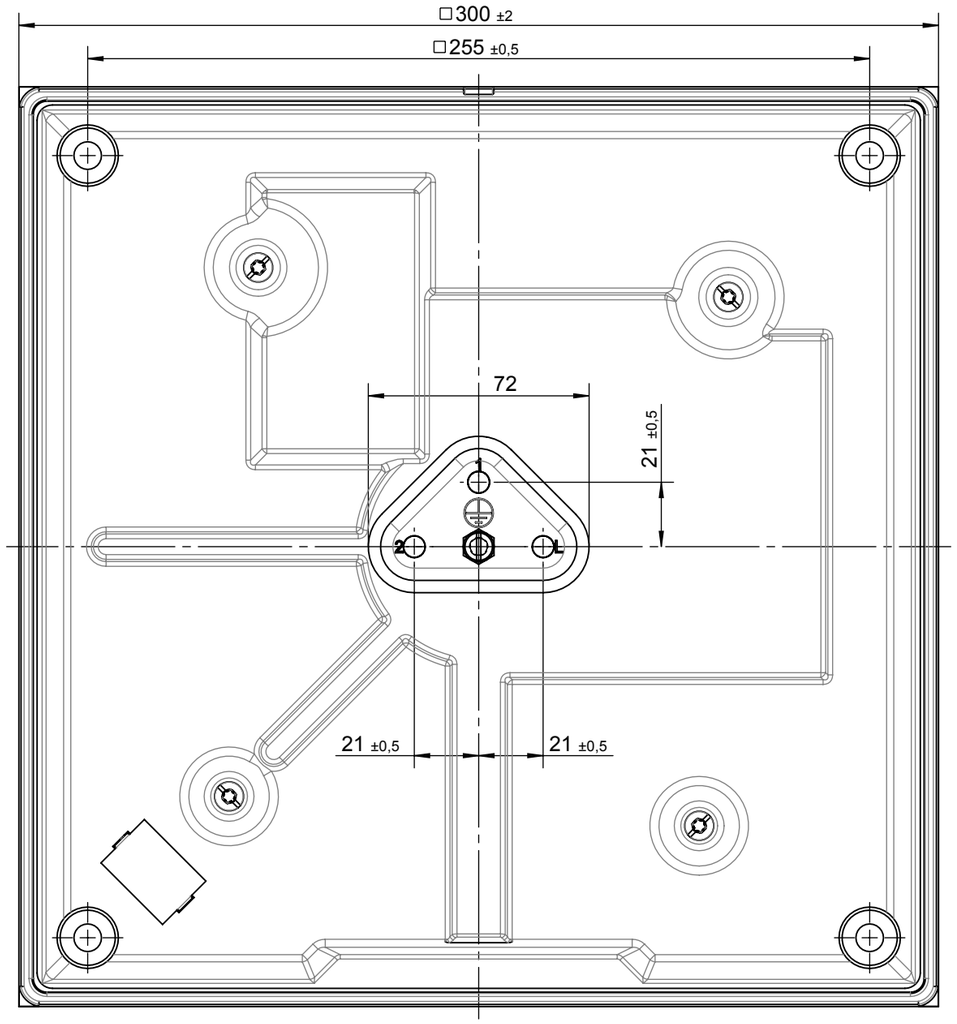

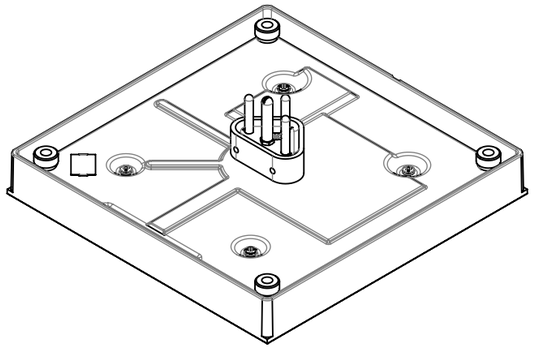

E·G·O
11.33310.005
3000W 400V
12 145

voltage marking
230 V without
240 V blue
400 V red
other green

mounting
The hotplate is to support on the 4 supporting disks

wiring diagram

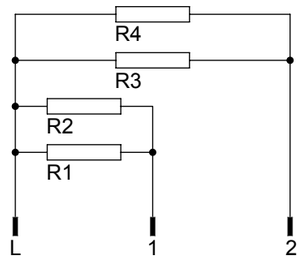

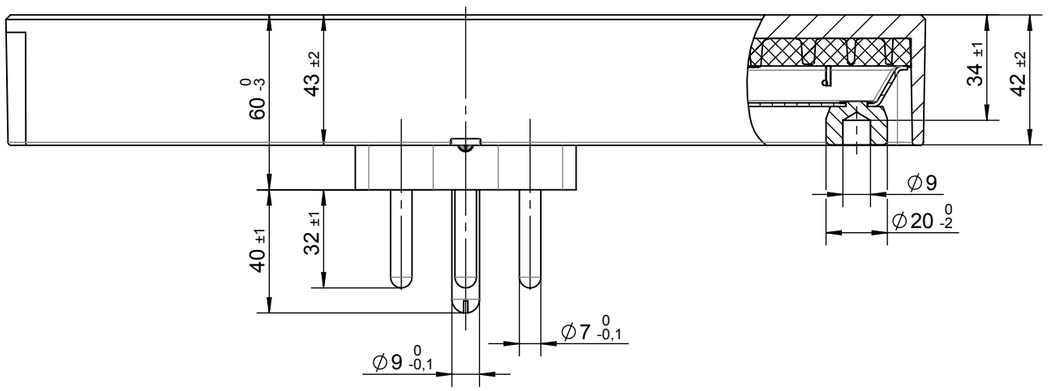

Pos	Type	Wattage	Voltage	Rated conductor				Switch positions						Appro.		
②		W	V	R1	R2	R3	R4				3	2	1			
6	11.33310.254	2500	440	625	625	625	625				2500	1250	625	X		
5	11.33310.114	3000	400	500	500	1000	1000				3000	2000	670	X		
4	11.33310.009	2500	230	625	625	625	625				2500	1250	625	X		
3	11.33310.008	2500	400	625	625	625	625				2500	1250	625	X		
2	11.33310.006	3000	230	750	750	750	750				3000	1500	750	X		
1	11.33310.005	3000	400	750	750	750	750				3000	1500	750	X		

This document is exclusively committed to you for the agreed purpose. Any kind of duplication, utilization or communication of its content is prohibited, if not expressly conceded otherwise. Violators are committed to pay compensations. Any claims of existing or future property rights remain unaffected.

2	A01597	2017-11-22	CAD	Date	Name
1	A01428	2012-07-31	Creat.	2017-10-16	MAKUCJ
Cha.	Information No.	Date	Proc.	2017-10-16	MAKUCJ
F.Rel.	A01398	2012-06-13	Rel.	2017-11-21	KOVACICB

Blank No. EN Mat.No.
Material ①
Scale Unit mm
Scale 1:2
Surface Texture ISO 1302
General Tolerances

Designation
EGO Com. Hotplate 300x300

E·G·O

Drawing No.	Sh.No.	Ver.	Stat.	Sheets	Doc.	Ex.Doc.
11.33310.XXX	101	02	F			

Origin | Repl.for 11.33310. Div. | Repl.by | Ref.

A3/V02 - Printout not true to Scale